Analog-to-Digital Converter (ADC)

Prof. Gerardo Flores

April 2026

Microprocessor Systems (CSCE 3340 - SENG 3345)

TAMIU

What is an ADC?

Analog-to-Digital Converter (ADC)

- Converts an **analog voltage signal** (e.g. from a sensor or potentiometer) into a **digital number**.
- Essential when microcontrollers need to read **non-digital signals**.
- Output is a binary value proportional to the input voltage.

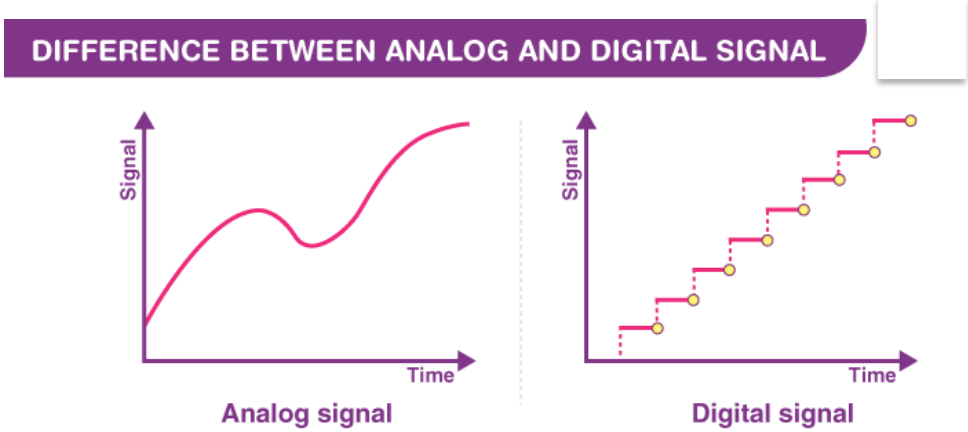

Key ADC Parameters

Resolution:

- Determines the number of steps in the conversion.
- STM32 supports 12-bit (0–4095) [$2^{12} = 4096$], 10-bit (0–1023), etc.

Reference voltage (Vref):

- Defines the upper voltage limit.
- Typically 3.3 V in STM32 Nucleo boards.

Sampling time:

- Defines how long the ADC samples the signal before conversion.

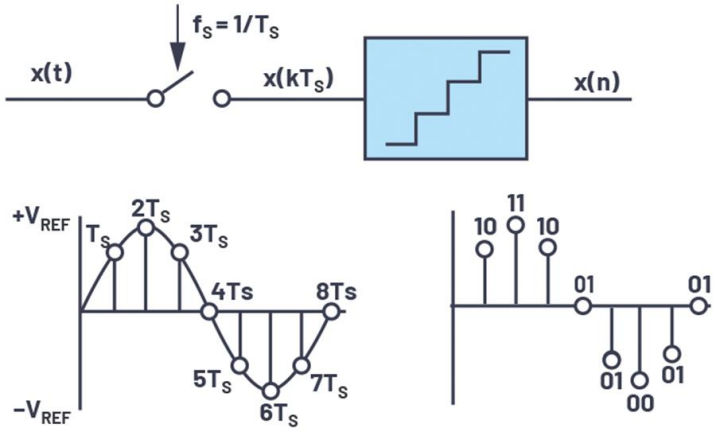

How STM32 ADC Works

ADC is part of the **peripheral modules** of the STM32 microcontroller. Supports:

- **Single conversion** (one channel)
- **Scan mode** (multiple channels)
- **Interrupts or** Direct Memory Access (**DMA)** for efficient sampling

Typical Applications

- Reading **potentiometers**
- Measuring **temperature sensors (e.g. LM35, NTC)**
- Detecting **light levels** (via LDR)
- Reading **battery voltages**

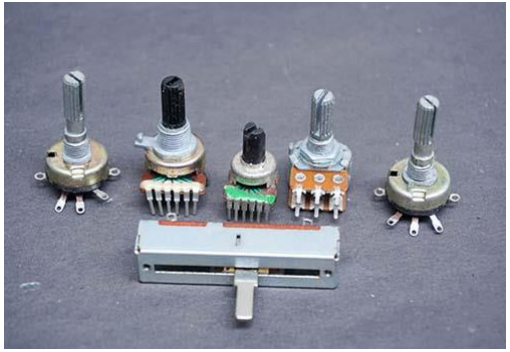

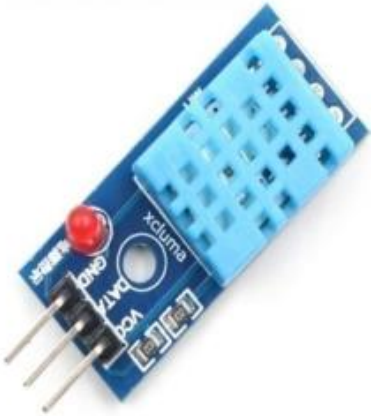

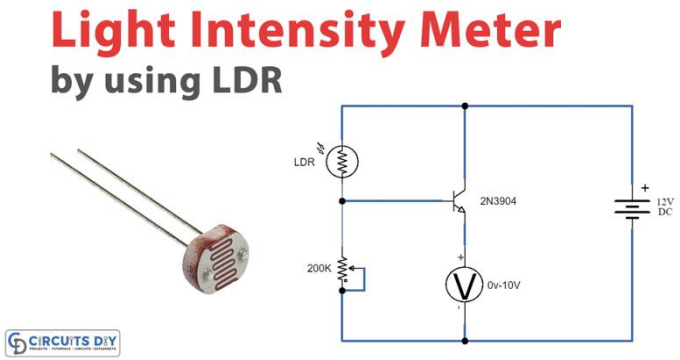

Minimal Recipe to Use an ADC (Register-Level STM32 Workflow)

ADCplusLED

1. Enable GPIO clock
2. Configure pin as analog
3. Enable ADC clock
4. Exit deep power-down
5. Enable ADC regulator
6. Wait stabilization delay
7. Run calibration
8. Select channel
9. Enable ADC
10. Wait until ready
11. Start conversion
12. Wait end-of-conversion
13. Read result

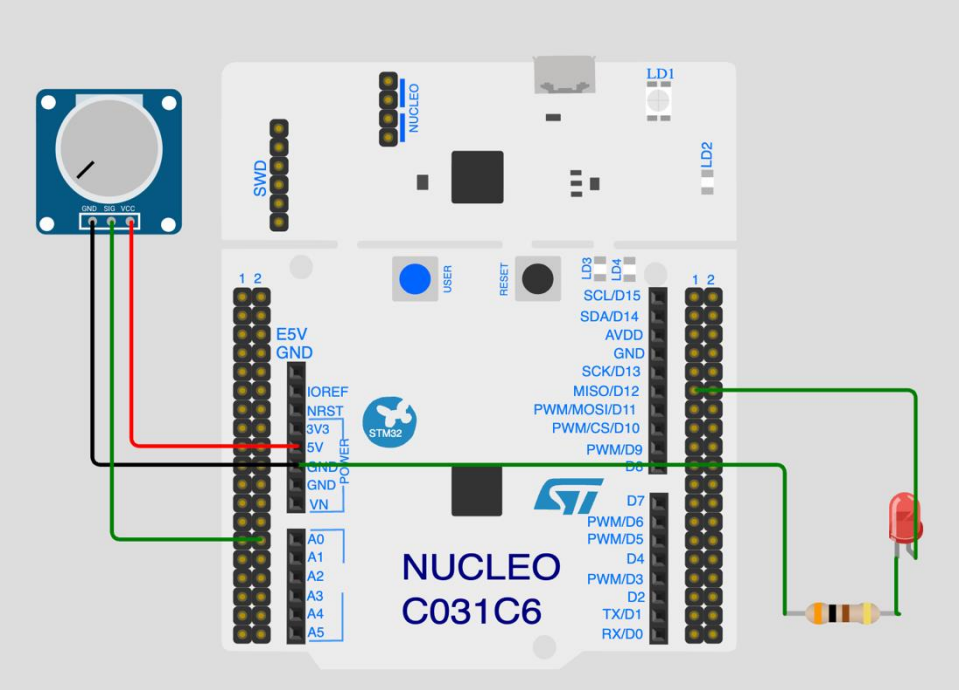

“Complex” steps

4. **Exit deep power-down**: Clearing the DEEPPWD bit exits deep-power-down mode and powers the ADC internal circuitry.

5. **Enable ADC regulator**: The ADC internal analog regulator provides a stable supply for accurate conversions.

7. **Run calibration**: Calibration compensates internal offset and mismatch errors [*offset error, capacitor mismatch, comparator bias*] in the ADC analog front-end.

8. **Select channel**: The ADC can read multiple analog inputs. The CHSELR register selects which one is connected to the converter.

Example 1: Controlling LED Blink Rate Using ADC Input

This program demonstrates how to use the ADC (Analog-to-Digital Converter) of an STM32 microcontroller to control the blink rate of an LED based on an analog input, such as a potentiometer.

Description:

- The ADC reads the analog value from channel 0 [PA0].
- The read value (0 to 4095 for 12-bit resolution) is mapped to a delay range between **100 ms** and **2000 ms [it is an approximation]**.
- The LED connected to **GPIOB PA5** toggles its state according to this dynamic delay, effectively changing its blink speed based on the analog input.

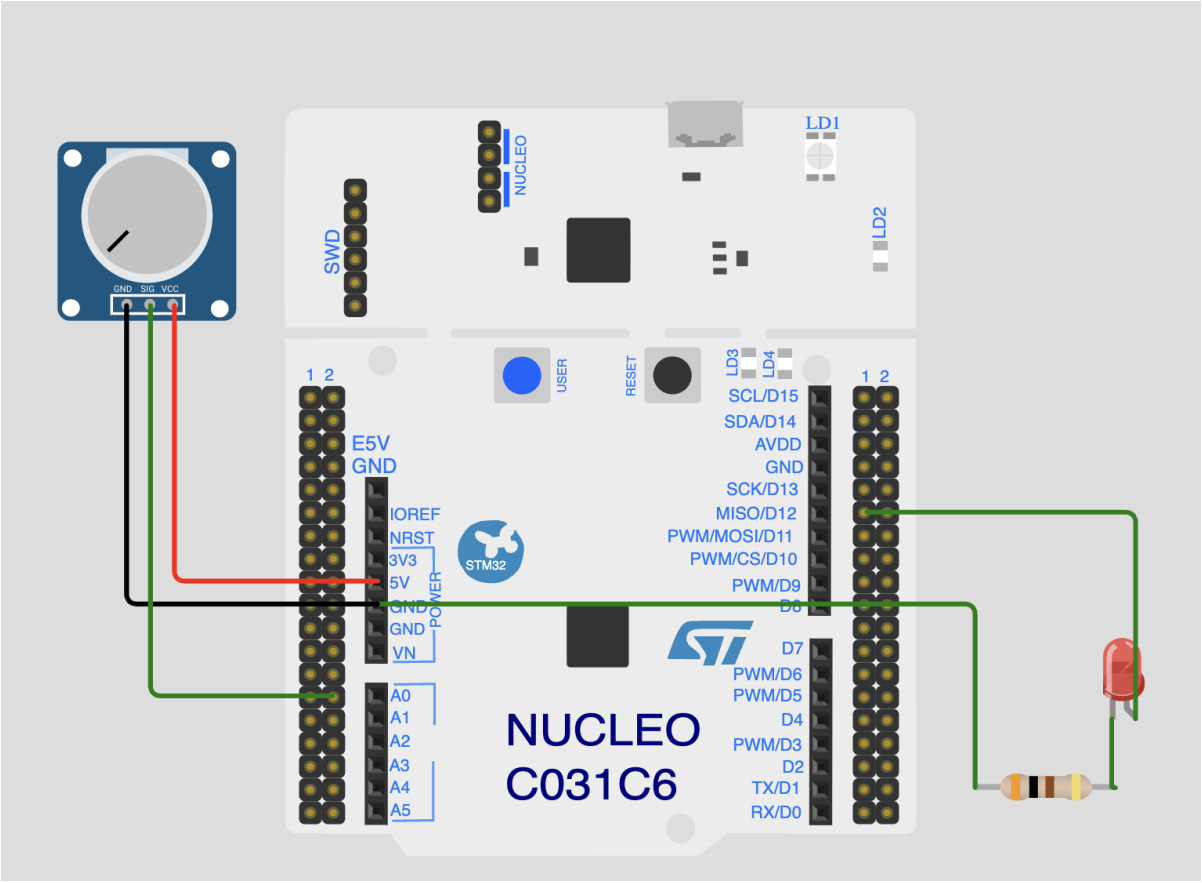
GND SIG VCC
SWD
NUCLEO
LD1
LD2
USER
RESET
LD3
LD4
1 2
E5V
GND
IOREF
NRST
3V3
5V
GND
GND
VN
POWER
A0
A1
A2
A3
A4
A5
STM32
NUCLEO
C031C6
SCL/D15
SDA/D14
AVDD
GND
SCK/D13
MISO/D12
PWM/MOSI/D11
PWM/CS/D10
PWM/D9
D8
D7
PWM/D6
PWM/D5
D4
PWM/D3
D2
TX/D1
RX/D0

Initialization

```c
#include "stm32c031xx.h"

/* ===== ADC bits ===== */
#define ADC_CR_ADEN_BIT        (1U << 0)
#define ADC_CR_ADSTART_BIT     (1U << 2)
#define ADC_CR_ADVREGEN_BIT    (1U << 28)
#define ADC_CR_DEEPPWD_BIT     (1U << 29)
#define ADC_CR_ADCAL_BIT       (1U << 31)

#define ADC_ISR_ADRDY_BIT      (1U << 0)
#define ADC_ISR_EOC_BIT        (1U << 2)

```

Conversion

```c
/* ======================================================
   ADC single conversion
   ====================================================== */

static uint16_t adc_read(void)
{
    /* 11. Start one conversion by software */
    ADC1->CR |= ADC_CR_ADSTART_BIT;

    /* 12. Wait until conversion is complete */
    while (!(ADC1->ISR & ADC_ISR_EOC_BIT)) {
    }

    /* 13. Return 12-bit result: 0 to 4095 */
    return (uint16_t)ADC1->DR;
}
```

Configuration

```c
static void adc_init(void)
{
    /* 1. Enable GPIOA clock */
    RCC->IOPENR |= RCC_IOPENR_GPIOAEN;

    /* 2. Set PA0 to analog mode */
    GPIOA->MODER |= (3U << 0);

    /* 3. Enable ADC clock */
    RCC->APBENR2 |= RCC_APBENR2_ADCEN;

    /* 4. Exit deep-power-down mode */
    ADC1->CR &= ~ADC_CR_DEEPPWD_BIT;

    /* 5. Enable internal ADC voltage regulator */
    ADC1->CR |= ADC_CR_ADVREGEN_BIT;

    /* 6. Wait for regulator stabilization */
    small_delay(20000);

    /* 7. Start ADC calibration */
    ADC1->CR |= ADC_CR_ADCAL_BIT;

    /* Wait until calibration is complete */
    while (ADC1->CR & ADC_CR_ADCAL_BIT) {
    }

    /* 8. Select channel 0 (PA0) */
    ADC1->CHSELR = (1U << 0);

    /* 9. Enable ADC */
    ADC1->CR |= ADC_CR_ADEN_BIT;

    /* 10. Wait until ADC is ready */
    while (!(ADC1->ISR & ADC_ISR_ADRDY_BIT)) {
    }
}
```

Project Idea:
Temperature Sensor Reading with Dual 7-Segment Displays

Design and implement a system using the STM32 microcontroller to **read a temperature sensor via ADC** and **display the temperature value** on **two 7-segment displays**.

- Properly **scale the ADC values** to match the sensor's temperature range.
- Ensure the system displays accurate readings, showing both **minimum (e.g., 00)** and **maximum values (e.g., corresponding to 99)** based on the sensor’s range.
- Use efficient GPIO management to control both displays.
- Bonus: Implement a simple refresh/multiplexing if needed for better display performance.

This project will help you practice ADC configuration, data processing, and interfacing with 7-segment displays.

Summary

- ADCs let microcontrollers sense the **analog world**.
- STM32 provides flexible ADCs with HAL abstraction.
- Always match resolution and reference voltage to your application needs.
- Combine with PWM, sensors, and control systems for interactive applications.